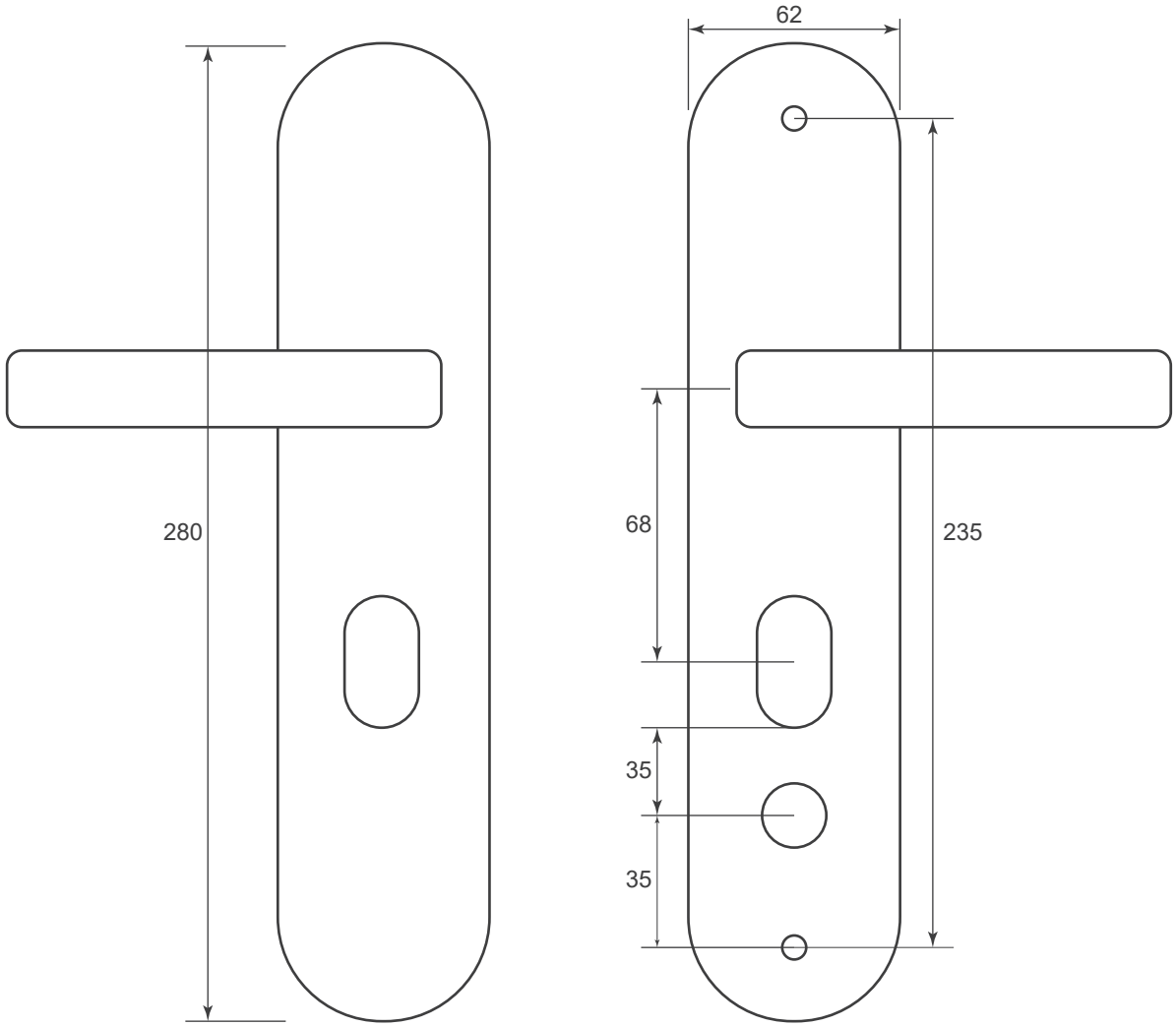Locking handle detail